Hardware In Details

With Jonne

Press Any Button!

Let's start with the easiest part of Pokitto hardware schematics, so that you learn how to follow schematics. The Pokitto front buttons (directional pad and A,B,C) are all connected to the 3V3 rail (3V3 signifies the 3.3 volt operating voltage of Pokitto). A button switch is normally open. When a button is pressed down, the pin on the the microcontroller receives the "high" signal (the 3.3 volts) and knows that a button is now pressed. The button-reading pins are marked B_A, B_B, B_C, B_LEFT, B_RIGHT, B_UP and B_DOWN. Next, we will look where they go on the microcontroller.

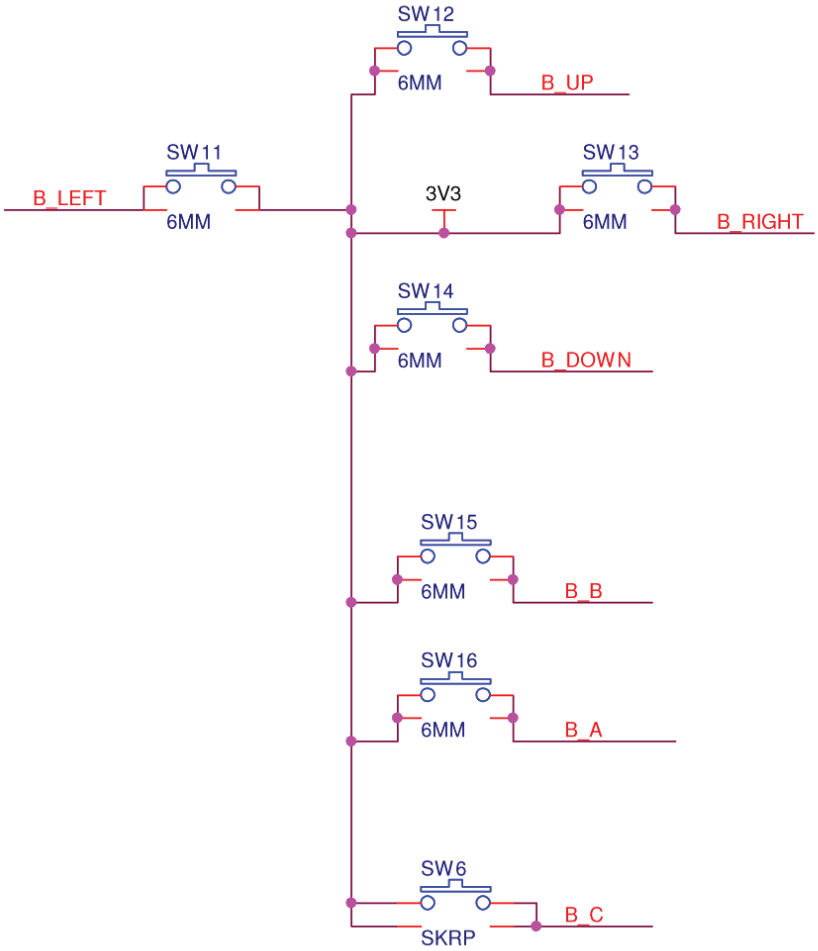

MCU port 1

The Microcontroller (MCU in short) is the “brain” that controls all other systems. The MCU in Pokitto is NXP LPC11U64.

The MCU has “ports” and each port has “pins”. The pins are - literally - the legs of the chip.

Pokitto MCU has 3 ports: port 0, port 1 and port 2. Port 1 (shown here) is mostly responsible for reading buttons and working with the PEX expansion connector.

From the top you see P1.0 is connected to LCD_RST. That means Pin 0 of Port 1 is the pin that resets the LCD. Next one down the list is P1.03 that is connected to B_DOWN. Yep, Pin 3 of Port 1 reads button presses from button B. The number 72 means physical leg 72 of the chip.

See those pins marked EXT12, EXT13, EXT14? They are pins that connected to the PEX.

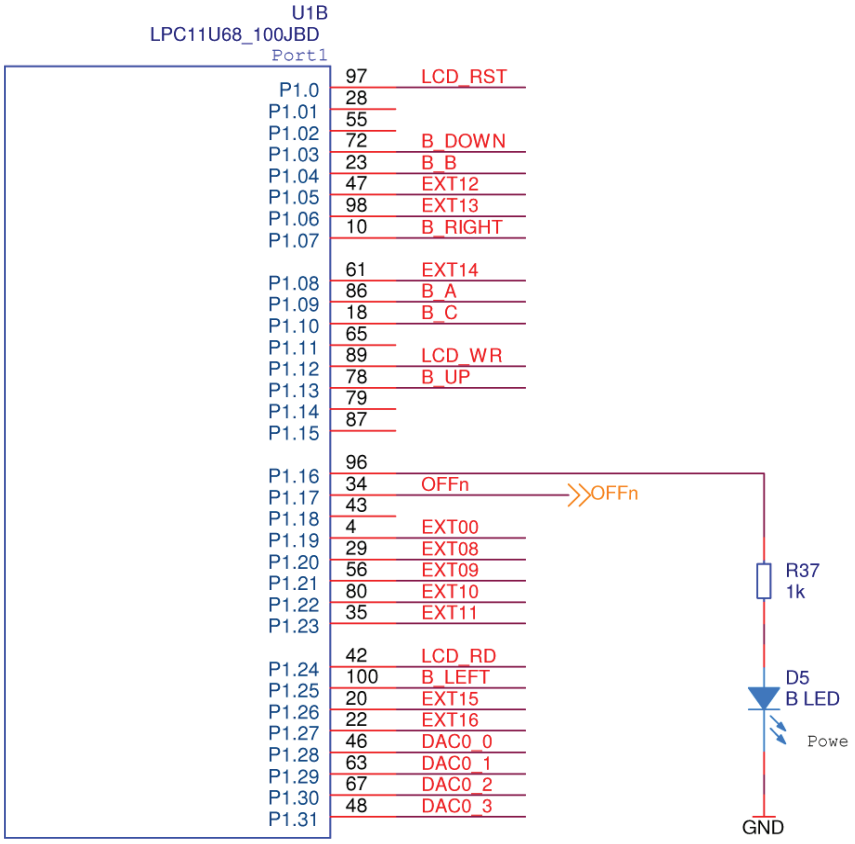

PEX

PEX is the Pokitto Expansion connector on top of Pokitto’s head. EXT00 to EXT15 are IO (input-output) pins that can be configured to blink LED lights, control motors etc.

ISP is a special pin that can be used to put Pokitto into a serial firmware programming mode. SWDIO and SWCLK are hardware debugging pins for hardcore programmers. Audio amp is the audio signal, RESET resets Pokitto. 3V3 supplies 3.3 volt current to external electronics, GND is ground. I2C pins are for I2C communication.

Read more info on PEX at pokitto.com/learn.

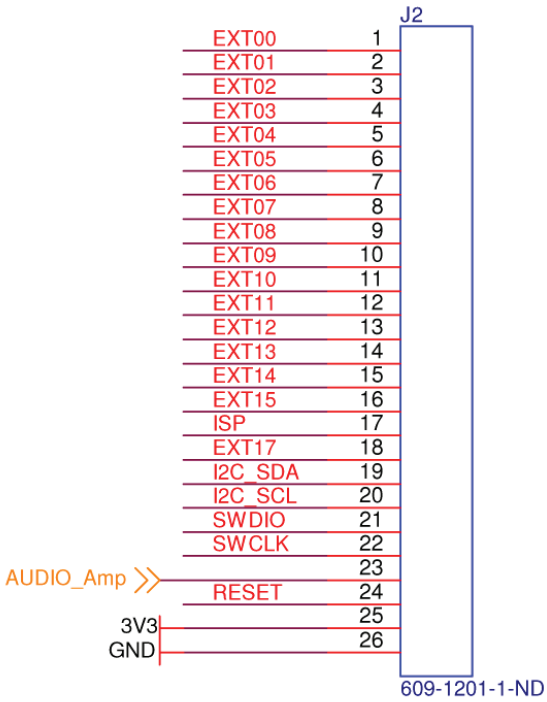

MCU port 2

Port 2 of the MCU is dedicated to outputting the graphics to the LCD.

What you see here is one of Pokitto's greatest strengths: a 16-bit wide, very fast parallel bus that allows us to do graphical effects at higher speeds than other similar consoles.

The block on the left side is Port 2 of the Pokitto MCU. The block on the right is the 45 pin flat flex cable connector that is connected to the LCD. By dedicating Port 2 to mostly sending the graphics to the LCD we can push a lot of data at once.

LCD_WR, LCD_RD and LCD_CD tell the LCD controller to either wait for data or commands.

LCD_D1 to LCD_D17 carry the actual data, which can be colour values of pixels or commands to the LCD controller.

The LCD controller is a Sitronix ST7775R. For cost reasons, the LCD component (display and cable) is custom made for Pokitto. You can buy LCD's separately from Pokitto web shop.

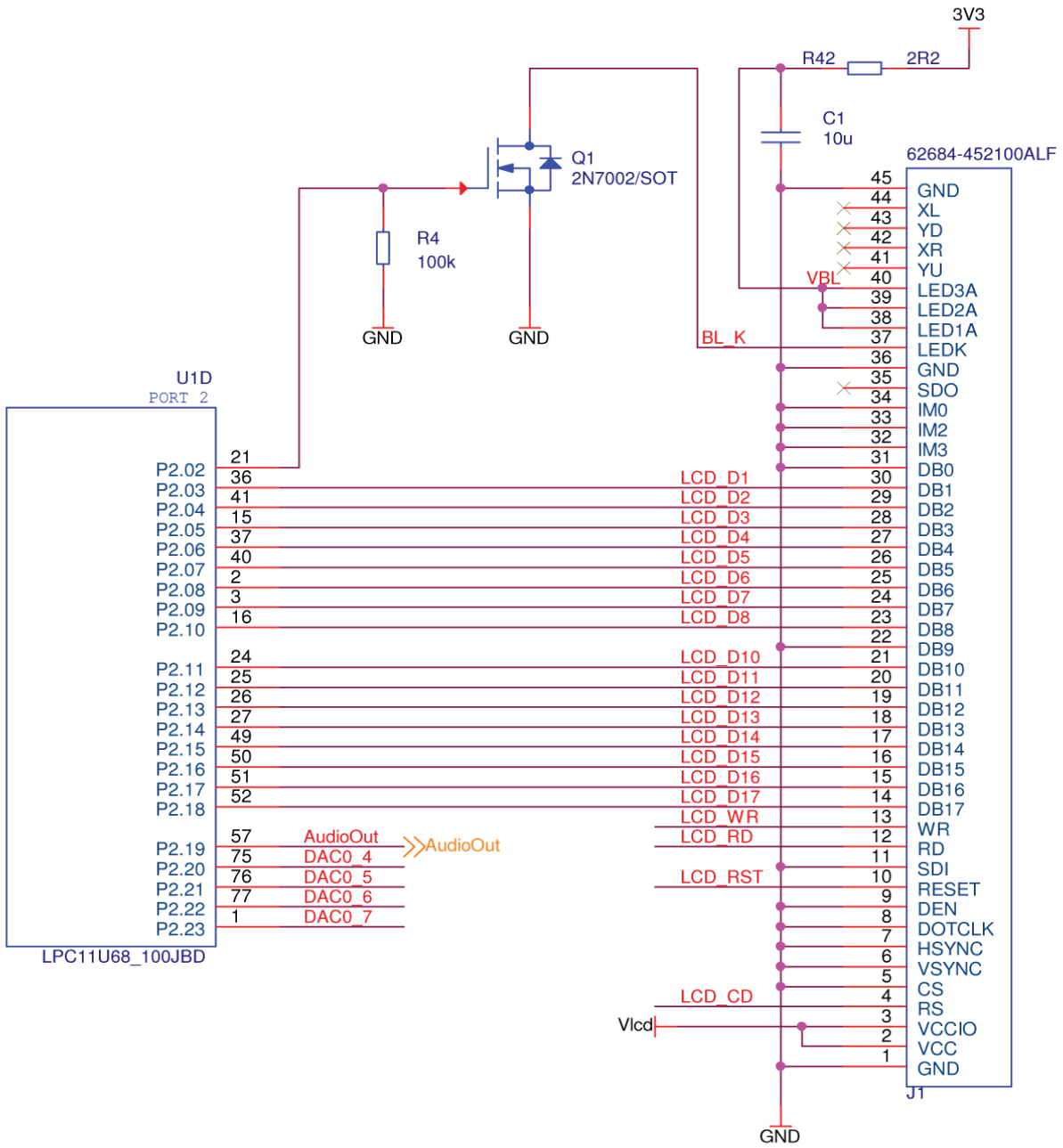

MCU port 0

Finally, Port 0 of the MCU, which has some of the "master" functions needed to control the chip.

RESET resets the chip (same as cycling power on/off), ISP puts Pokitto into USB flashing mode for updating the software.

I2C_ pins are for the I2C communication protocol. I2C_SCL is the clock pin, that drives the communication in set intervals. I2C_SDA is where the data moves, one bit at a time.

SD_ pins are connected to the MicroSD card socket.

Vref and BattLvl are for battery charge monitoring.

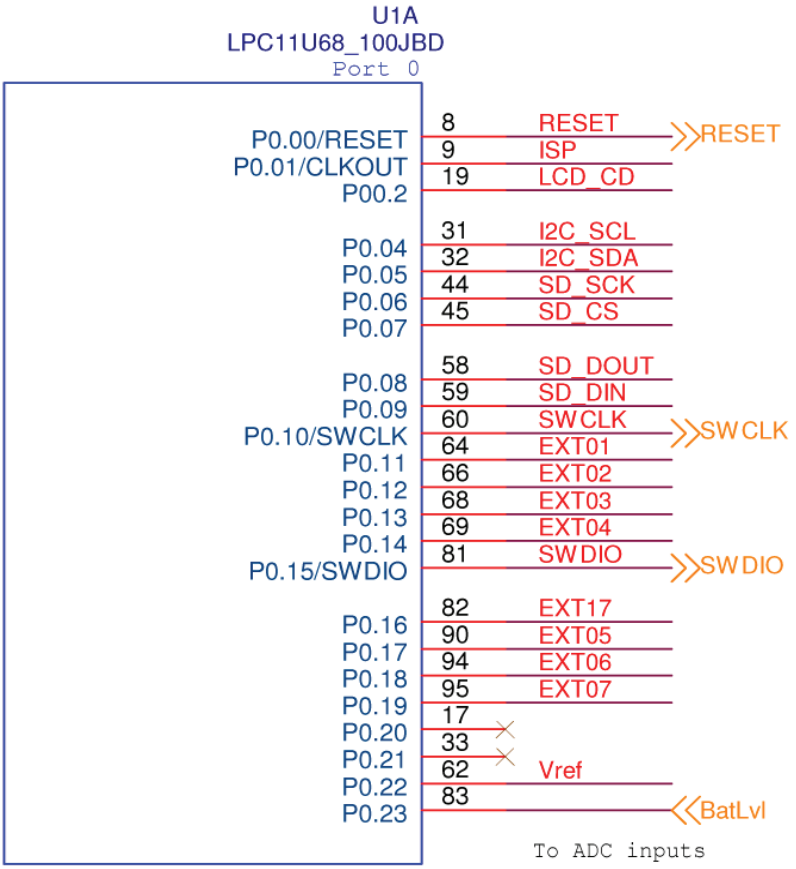

MicroSD

Pokitto uses the SPI protocol to communicate with the MicroSD card. The MCU is the 'SPI Master' and the SD card is the 'SPI Slave'. This Master controls how data is being exchanged. A SPI bus can have several Slave devices. SD_CS is pulled low (0V) to tell the device that it is the active Slave. Only one Slave is active at once.

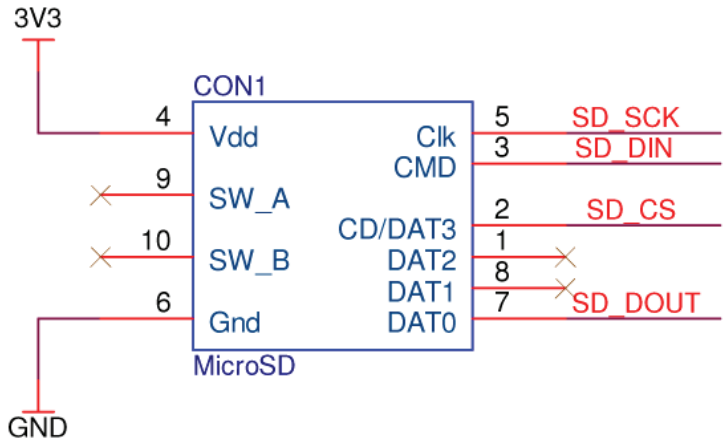

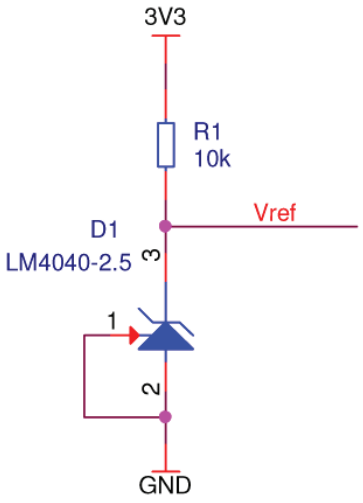

Battery charge monitoring

Vref is connected to LM4040 shunt voltage reference, that outputs a constant 2.5V - as long as there is over 2.5V in the battery. By comparing the input value of BattLvl pin (P0.23) to the constant value of Vref pin (P0.22) the actual charge level of the battery can be calculated.

MCU Power & Clock, RTC and USB

Before we are 'done' with the MCU, we need to talk about the other connections that are needed to make the Pokitto microcontroller run.

3V3 (3.3 volts) from the battery, through the voltage regulator, is fed into the VDD supply pins. Ground (0V) is connected to the grounding pins (VSS). Together, these pins are what powers the chip. You will often see VDD / VSS marked in other chips as well. Now you know what they are!

XTAL pins are connected to Y1, a ceramic resonator. This resonator provides the chip with a highly accurate 12MHz 'MCU Clock' that is used to keep everything in pace. With chips, if something does not work, its usually either power or clock missing - they're important!

The Real Time Clock (RTC) is something completely different from the MCU clock. RTCXin and RTCxout are wired to Y2, a 32.768kHz oscillator.

The Real Time Clock is an optional feature that was added to Pokitto for the benefit of users. It allows Pokitto to keep the correct time and date - even when Pokitto is turned off! This allows us to create time-dependent applications like alarm clocks or virtual pets.

In order for the RTC to function when Pokitto is powered off, the RTC gets a tiny bit of power from the battery through the MCP1700 Low Quiescent Current LDO (long words that simply mean it wastes as little energy as possible when Pokitto is in 'power off' state).

...continued in Pokitto Magazine #2

Whew. I didn't realize explaining the Pokitto hardware in detail would take up so many pages.

We still need to go through the audio circuit, and the main power circuit, and those are easily several pages.

I hope you've enjoyed this tour into the internals of Pokitto

Tune in for more in the next issue of Pokitto Magazine!

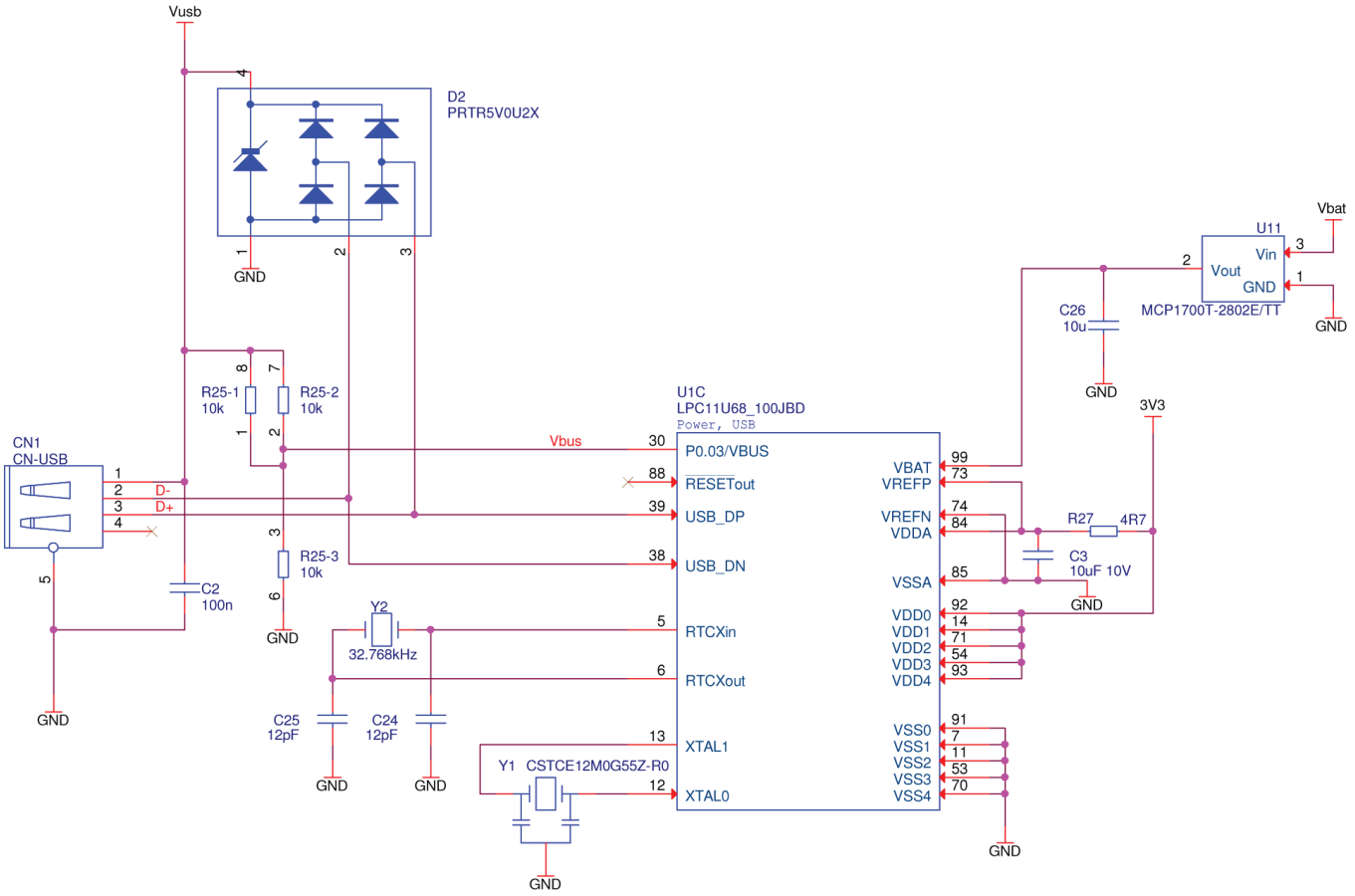

Hardware In Details

PART 2/2 with Jonne

Resistor-ladder DAC

A resistor-ladder DAC (digital-to-analog converter) is a simple way of turning a digital value into an analog voltage from 0 to 3.3V.

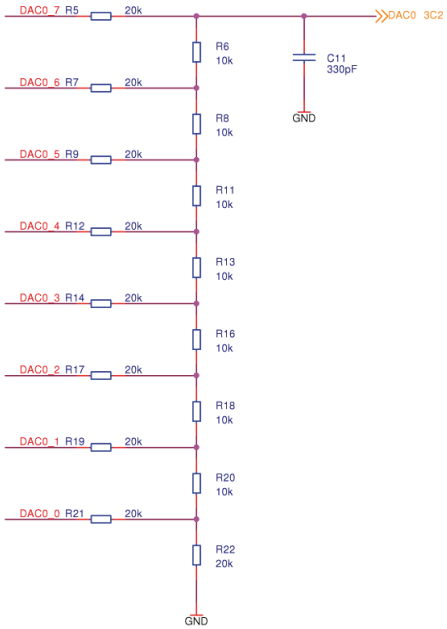

Audio Circuit

Audio circuit has 2 inputs: DAC from resistor-ladder DAC and a PWM value, which both can produce sound. The audio signal is amplified via two opamps (U2 & U4). MCP4018 is a digital potentiometer for controlling volume. TPA2005 is an amplification IC that drives the speaker, and gets a signal only when headphones are not connected.

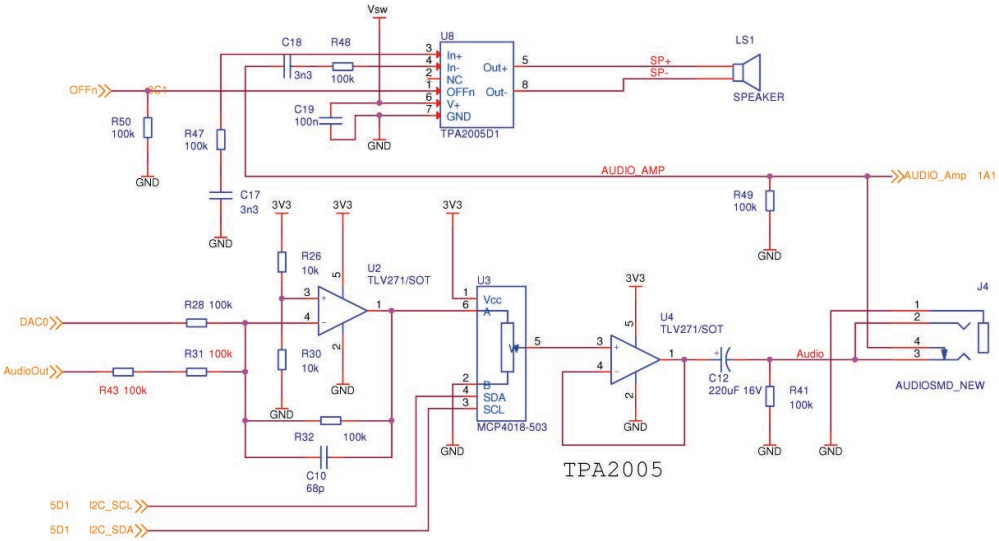

Power Circuit

VUSB (5 Volts) comes from the USB connector. TP4056 is the Li-Po charger chip, J5 is where Li-Po battery is connected. SW9 is the main switch, that in turns on device power via the Q3 MOSFET. SPX3819 is the regulator, that creates 3V3 - the actual 3.3 Volt line that runs the Pokitto MCU and other components.